DW735 Motor PLANER THICKNESSER 1

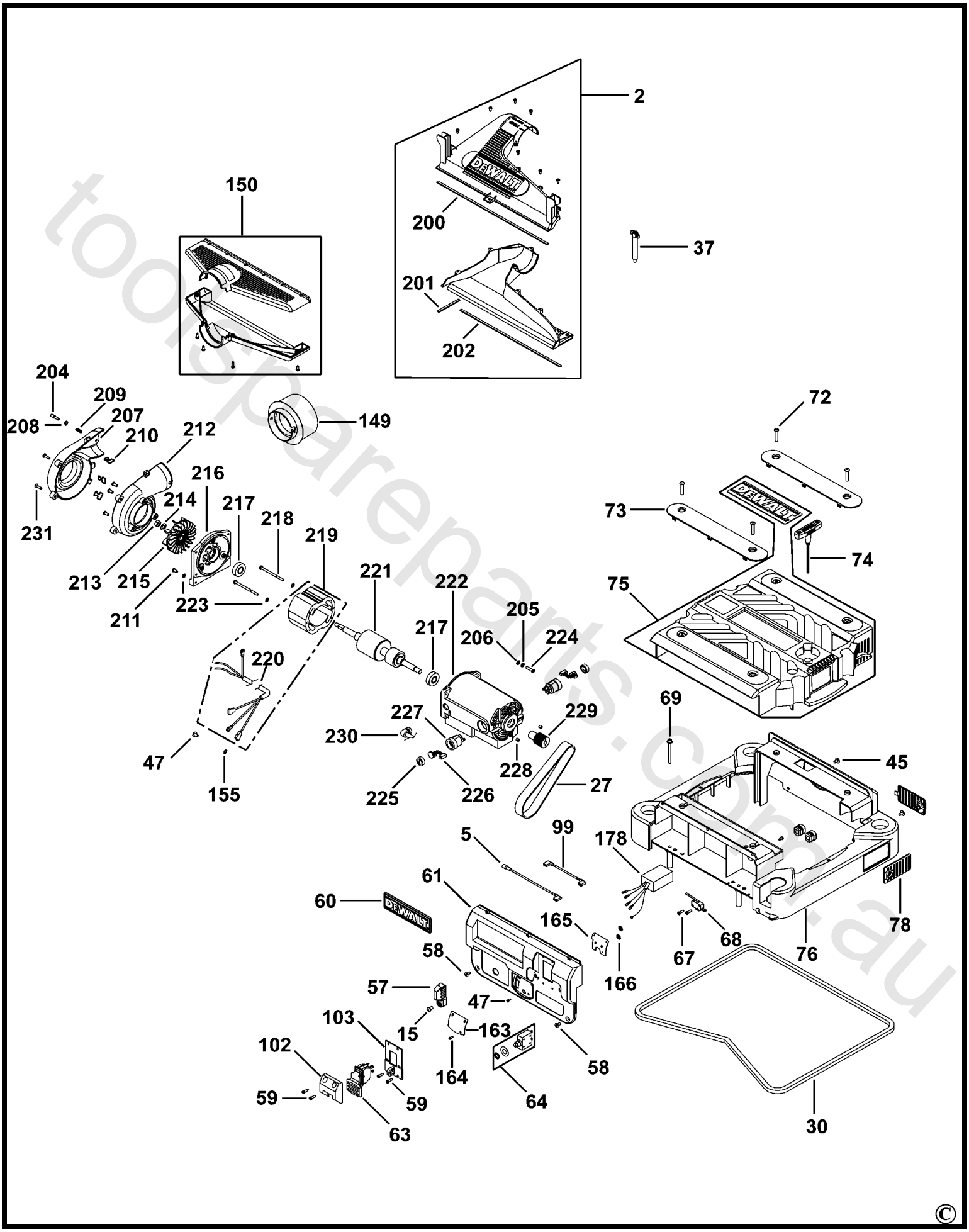

toolspareparts.com.au

©